Technical data sheet

Product features

Cooking range combined with electric convection oven GN 1/1 - 4x burner 400 V / 3N		
Model	**SAP Code**	00012311
SPT 90/80 11 GE	**A group of articles - web**	Stoves



- Device type: Combined unit
- Power consumption of the zone 1 [kW]: 8,5
- Power consumption of the zone 2 [kW]: 8,5
- Power consumption of the zone 3 [kW]: 5
- Power consumption of the zone 4 [kW]: 3,5
- Ignition: Eternal flame
- Type of internal part of the appliance 1 (eg oven): Electric
- Type of internal part of the appliance 2 (eg oven): Hot air
- Material: AISI 304 top plate, AISI 430 cladding

SAP Code	00012311	**Power consumption of the zone 1 [kW]**	8,5
Net Width [mm]	800	**Power consumption of the zone 2 [kW]**	8,5
Net Depth [mm]	900	**Power consumption of the zone 3 [kW]**	5
Net Height [mm]	900	**Power consumption of the zone 4 [kW]**	3,5
Net Weight [kg]	102.00	**Type of internal part of the appliance 1 (eg oven)**	Electric
Power electric [kW]	3.130	**Type of internal part of the appliance 2 (eg oven)**	Hot air
Loading	400 V / 3N - 50 Hz	**Width of internal part [mm]**	360
Power gas [kW]	24.500	**Depth of internal part [mm]**	548
Type of gas	Natural gas, propane butane	**Height of internal part [mm]**	338
Number of zones	4		

RM GASTRO, s.r.o.,
Třída Čs. armády 816,
391 81 Veselí nad Lužnicí 1, ID:49825062

Technical data sheet

Technical drawing

Cooking range combined with electric convection oven GN 1/1 - 4x burner 400 V / 3N		
Model	**SAP Code**	00012311
SPT 90/80 11 GE	**A group of articles - web**	Stoves

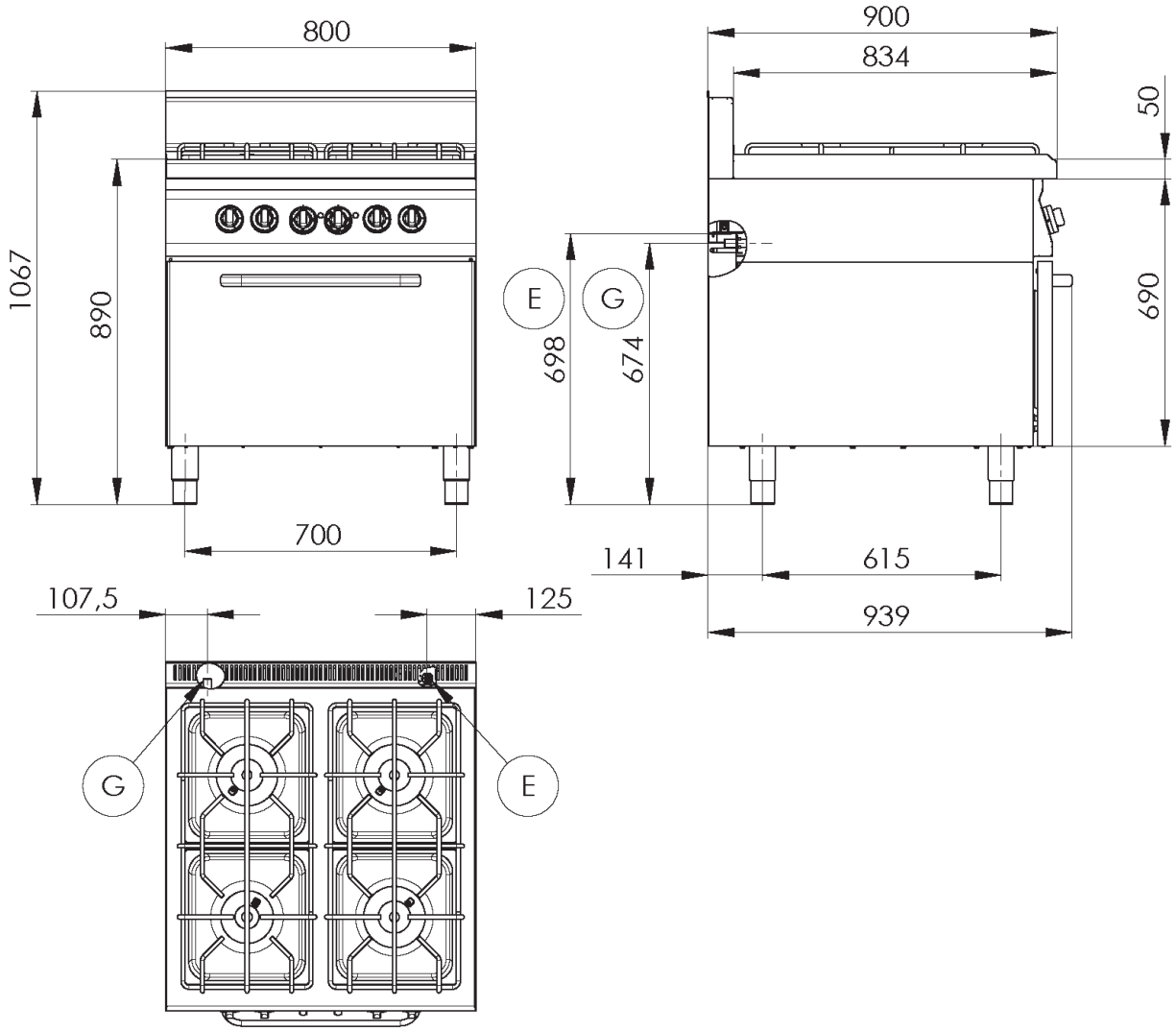

RM GASTRO, s.r.o.,
Třída Čs. armády 816,
391 81 Veselí nad Lužnicí 1, ID:49825062

Technical data sheet

Product benefits

Cooking range combined with electric convection oven GN 1/1 - 4x burner 400 V / 3N		
Model	**SAP Code**	00012311
SPT 90/80 11 GE	**A group of articles - web**	Stoves

1

Massive construction of burners

high performance and efficiency
brass burners with heat distributor
eternal flame
long life
demountable

- energy saving (perfect combustion)
- time saving for food preparation
- easy maintenance/cleaning

2

Hygienic moldings of the top plate

absence of sharp corners and edges (potential places where dirt could stick)
smooth transitions

- easy quick cleaning

3

Degree of protection of the control elements IPX4

maintenance-free system
resistance to splash water
long life

- savings on service interventions
- easy cleaning and maintenance of equipment

4

All-stainless design

long life
resistance of a ground steel plate with a thickness of 10 mm

- savings on service interventions
- higher corrosion resistance

5

Safety element – thermocouple

safe service for staff
there is no unnecessary gas leakage
long life

- savings on service interventions
- easier and faster operation

6

Hot air oven

hot air baking
high capacity and variability
all-stainless design

- suitable for meat, fish, baked pasta, white meat, sweet pastries
- long service life
- easy to clean

RM GASTRO, s.r.o.,
Třída Čs. armády 816,
391 81 Veselí nad Lužnicí 1, ID:49825062

Technical data sheet

Technical parameters

Cooking range combined with electric convection oven GN 1/1 - 4x burner 400 V / 3N

Model	SAP Code	00012311
SPT 90/80 11 GE	A group of articles - web	Stoves

1. **SAP Code:**
   00012311
2. **Net Width [mm]:**
   800
3. **Net Depth [mm]:**
   900
4. **Net Height [mm]:**
   900
5. **Net Weight [kg]:**
   102.00
6. **Gross Width [mm]:**
   970
7. **Gross depth [mm]:**
   840
8. **Gross Height [mm]:**
   1160
9. **Gross Weight [kg]:**
   112.00
10. **Device type:**
    Combined unit
11. **Construction type of device:**
    Stationary
12. **Power electric [kW]:**
    3.130
13. **Loading:**
    400 V / 3N - 50 Hz
14. **Power gas [kW]:**
    24.500
15. **Ignition:**
    Eternal flame
16. **Type of gas:**
    Natural gas, propane butane
17. **Material:**
    AISI 304 top plate, AISI 430 cladding
18. **Worktop material:**
    AISI 304
19. **Worktop Thickness [mm]:**
    1.50
20. **Number of zones:**
    4
21. **Power consumption of the zone 1 [kW]:**
    8,5
22. **Power consumption of the zone 2 [kW]:**
    8,5
23. **Power consumption of the zone 3 [kW]:**
    5
24. **Power consumption of the zone 4 [kW]:**
    3,5
25. **Maximum device temperature [°C]:**
    300
26. **Minimum device temperature [°C]:**
    50
27. **Number of power control stages:**
    6
28. **Adjustable feet:**
    Yes

RM GASTRO, s.r.o.,
Třída Čs. armády 816,
391 81 Veselí nad Lužnicí 1, ID:49825062

Technical data sheet

Technical parameters

Cooking range combined with electric convection oven GN 1/1 - 4x burner 400 V / 3N		
Model	**SAP Code**	00012311
SPT 90/80 11 GE	**A group of articles - web**	Stoves

29. Number of burners/hot plates:
4

30. Type of gas cooking zones:
Classic

31. Burner type:
Brass, detachable

32. Oven Type:
electric hot air

33. Oven size:
GN 1/1

34. Oven material:
Stainless steel

35. Type of internal part of the appliance 1 (eg oven):
Electric

36. Type of internal part of the appliance 2 (eg oven):
Hot air

37. Width of internal part [mm]:
360

38. Depth of internal part [mm]:
548

39. Height of internal part [mm]:
338

40. Gasket:
Yes

41. Connection to a ball valve:
1/2

RM GASTRO, s.r.o.,
Třída Čs. armády 816,
391 81 Veselí nad Lužnicí 1, ID:49825062